MECHANICAL SYMBOLS LEGEND

ITEM	ABBR.	DESCRIPTION
	-	RECTANGULAR DUCT
	-	ROUND DUCT
	-	45 ° TAP - USE AT BRANCH DUCTS ONLY
	-	CURVED (LONG SWEEP) DUCT ELBOW MINIMUM RADIUS R=1.5 x WIDTH
	-	90 ° RECTANGULAR DUCT ELBOW WITH SINGLE RADIUS TURNING VANES
FD	FD	FIRE DAMPER - COMBO FIRE / SMOKE DAMPER
BD	OBD	BALANCING DAMPER (USE O.B.D. UNLESS NOTED OTHERWISE)
BD	-	SPIN-IN DUCT TAKE-OFF W/ DAMPER
	SA	SUPPLY AIR DUCT
	EXH	EXHAUST AIR DUCT
	RA	RETURN AIR DUCT
T	TSTAT	THERMOSTAT
S	RTS	REMOTE TEMPERATURE SENSOR
H	HS	REMOTE HUMIDITY/TEMPERATURE SENSOR
NH	NH	NEXREV EMS HUMIDITY SENSOR
NT	NT	NEXREV EMS TEMPERATURE SENSOR
BP	BP	BUILDING PRESSURE SENSOR
SD	SD	DUCT MOUNTED SMOKE DETECTOR
OED	-	OPEN-ENDED DUCT
	-	1-WAY THROW SUPPLY AIR DIFFUSER
	-	2-WAY THROW SUPPLY AIR DIFFUSER
	-	2-WAY THROW SUPPLY AIR DIFFUSER
	-	3-WAY THROW SUPPLY AIR DIFFUSER
	-	4-WAY THROW SUPPLY AIR DIFFUSER
	-	RETURN AIR GRILLE
	-	EXHAUST GRILLE
	-	AIR DEVICE DESIGNATION — AIR DEVICE FACE SIZE — AIR DEVICE CFM
	-	MECHANICAL/PLUMBING EQUIPMENT DESIGNATION — MARK (DESIGNATION FOR SPECIFICATION OR MARK FOR SCHEDULE ON DRAWING)
XX'-X"	-	SPOT ELEVATION, MEASURED FROM BOTTOM OF DUCT

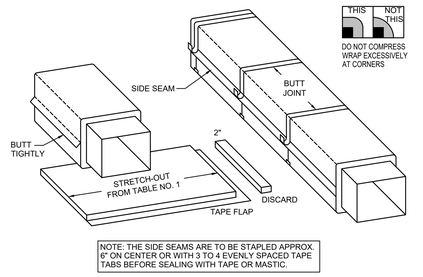

8 M2.0 DUCT INSULATION WRAP DETAIL
SCALE: N.T.S.

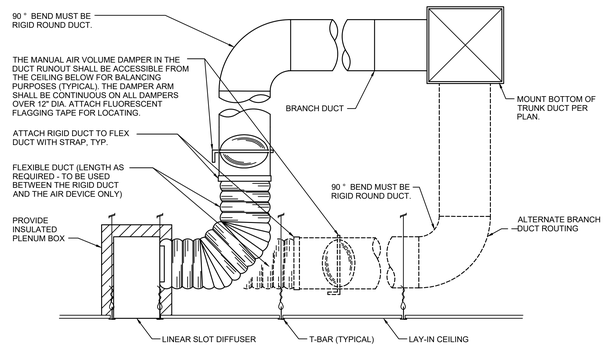

7 M2.0 CEILING LINEAR DIFFUSER CONNECTION
SCALE: N.T.S.

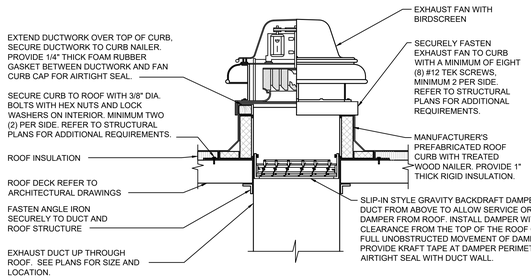

6 M2.0 ROOF MOUNTED EXHAUST FAN
SCALE: N.T.S.

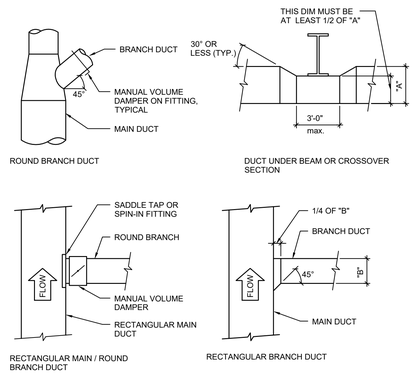

5 M2.0 TYPICAL DUCT CONNECTIONS
SCALE: N.T.S.

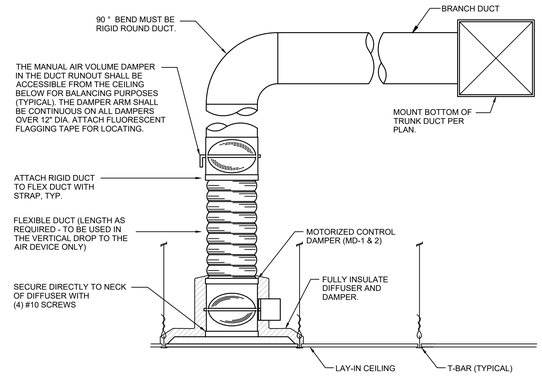

4 M2.0 MOTOR DAMPER CONNECTION
SCALE: N.T.S.

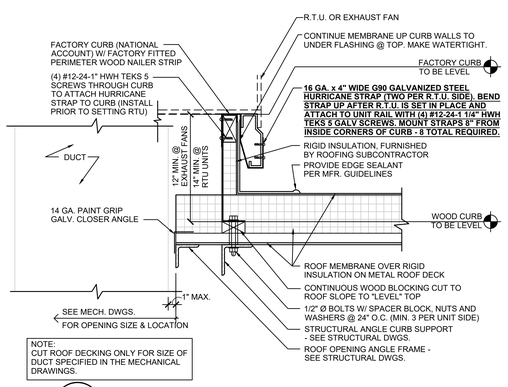

3 M2.0 RTU CURB DETAIL
SCALE: N.T.S.

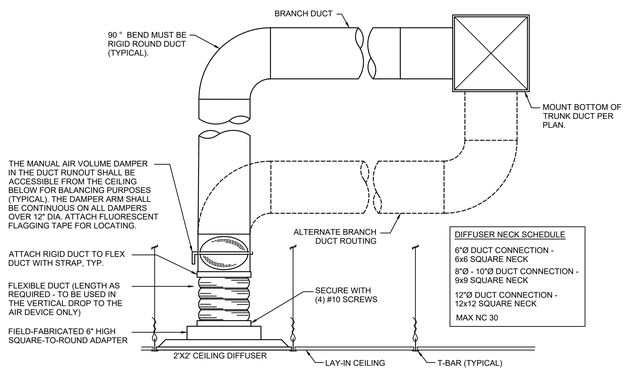

2 M2.0 CEILING DIFFUSER CONNECTION
SCALE: N.T.S.

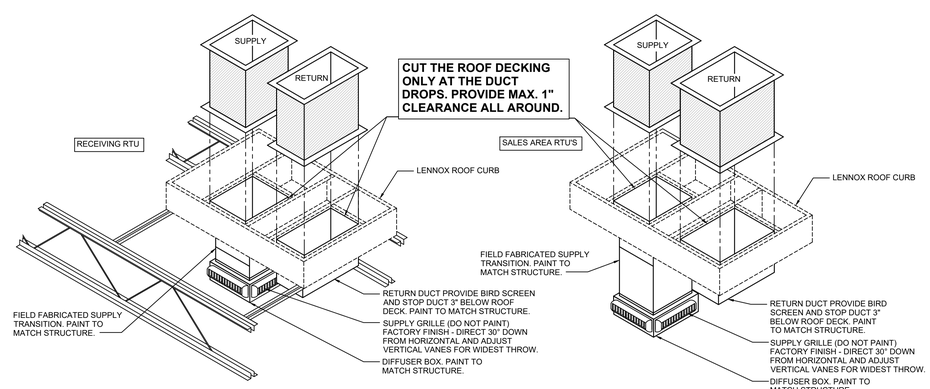

NOTES:
1. CURBS PLUS FOUR WAY DRUM LOUVER SUPPLY DIFFUSER SUPPLIED BY LENNOX WITH UNIT. SEE "AIR DISTRIBUTION DEVICE SCHEDULE" FOR CLARIFICATION. THE MECHANICAL CONTRACTOR SHALL FIELD FABRICATE THE SUPPLY AND RETURN DUCT DROPS AND THE SUPPLY DUCT TRANSITION TO THE FOUR WAY DRUM LOUVER SUPPLY DIFFUSER. IN THE SALES AREA THE SUPPLY DIFFUSER BOX SHALL BE INSTALLED TIGHT TO THE BOTTOM OF THE ROOF STRUCTURE. IN THE RECEIVING AREA THE SUPPLY DIFFUSER SHALL BE INSTALLED WITH THE BOTTOM OF THE SUPPLY DIFFUSER BOX ABOVE THE BOTTOM CHORD OF THE ROOF JOISTS.
2. THE BOTTOM OF THE DIFFUSER BOX SHALL BE MOUNTED ABOVE THE BOTTOM CHORD OF THE ADJACENT ROOF BAR JOISTS IN THE RECEIVING AREA. IN THE SALES AREA MOUNT THE TOP OF THE DIFFUSER BOX FLUSH WITH THE BOTTOM OF THE ADJACENT ROOF JOISTS.

1 M2.0 SALES / RECEIVING SUPPLY DIFFUSER
SCALE: N.T.S.

TENANT:
PETSMART
19601 North 27th Avenue
Phoenix, Arizona 85027 - (623) 580-6100

PROJECT:
16K 2026 U.S. INSTRUCTION SET

AUGUST 10, 2026

ARCHITECT:

CONSULTANT:

SEAL:

CITY SEAL:

DISCLAIMER:
THIS DRAWING AND DESIGN IN COPYRIGHT PROTECTED WHICH SHALL NOT BE USED, REPRODUCED OR REVISED WITHOUT WRITTEN PERMISSION BY PETSMART. THE CONTRACTOR SHALL CHECK AND VERIFY ALL DIMENSIONS AND UTILITY LOCATIONS AND REPORT ALL ERRORS AND OMISSIONS PRIOR TO COMMENCING WORK.
THIS DRAWING IS NOT TO BE SCALED.

ISSUED FOR:

#	DESCRIPTION	DATE

PROJECT NO: 16K 2026 US INSTRUCTION SET
ORIGINAL SCALE: AS INDICATED
DRAWN BY: XXX
CHECKED BY: XXX
PAGE #: 01 OF: 47
IF THIS BAR IS NOT 1" LONG, ADJUST YOUR PLOTTING SCALE 1"
DISCIPLINE: MECHANICAL

TITLE:
MECHANICAL DETAILS AND SYMBOLS

SHEET NUMBER:
M2.0